TYPE C STAGE LIGHT
V056-STAGE-C

Application Features

For retail and hospitality applications.

Construction

Metal fixture housing with hinged barn doors (no rotation)

Finish

- Blackened Steel
- Choice of silver, white or black powder paint
- Specify Other

Electrical

- 1 x E26 Medium Base Socket (Lamps Not Included)

Mounting

- Fixture mounts to a GES style track with M10 x 1.0 mounting hardware to structure (structure supplied by others)
- Fixture mounts to a GES style track via a yoke

Approvals

UL Listed

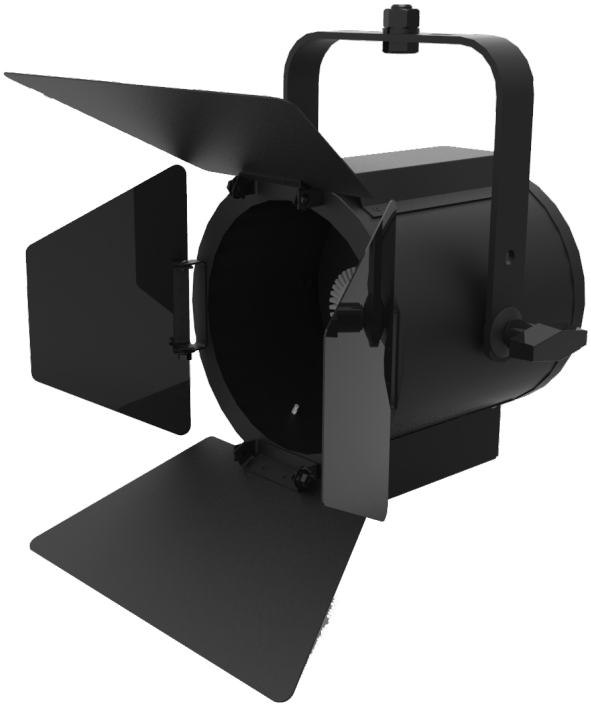

JOB NAME

V056-STAGE-C- _____ - _____ - _____ - _____

Finish	Mounting Type	Cord Length	Track Adapter Type
○ BK BLACK	○ HM HARDWARE MOUNT ON YOKE	○ SPECIFY CORD LENGTH	● GES TRACK MOUNT
○ WH WHITE	○ DT DIRECT TRACK MOUNT ON YOKE		
○ SV SILVER			
○ BS BLACKENED STEEL			
○ SO SPECIFY OTHER			

Vision Quest Lighting, Inc., assumes no responsibility for suitability of these materials in any luminaire or application. Please test for fit and function prior to ordering project quantities.

Manufactured by Vision Quest Lighting in the USA 90 13th Avenue, Unit 1, Ronkonkoma, NY 11779 Tel: 631-737-4800 Fax: 631-737-2808 Email: info@VQL.com

TYPE C STAGE LIGHT
V056-STAGE-C

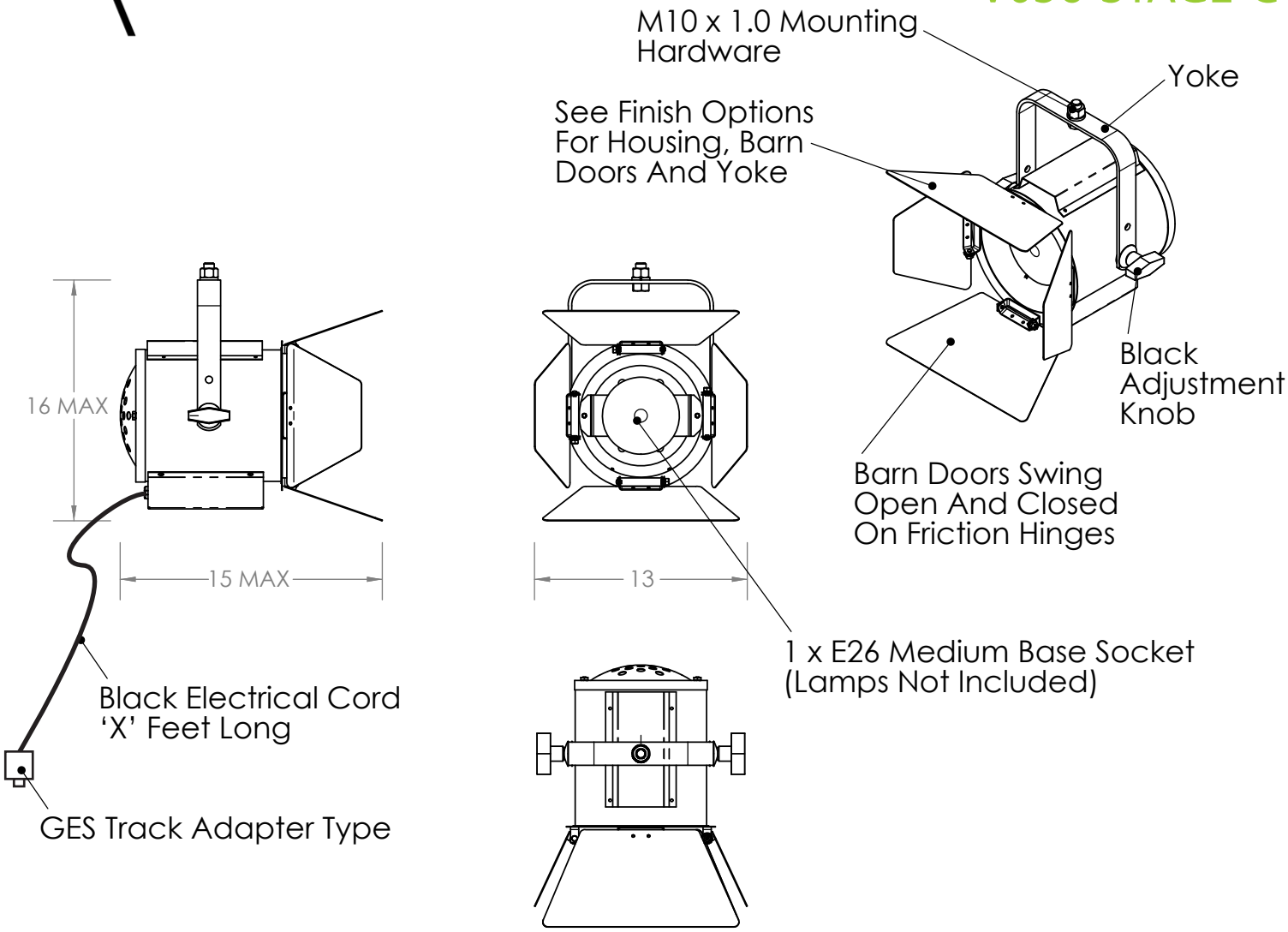

Fixture specifications

V056-STAGE-C-FSH-MNT-CL-ADT Type C Stage Light	
Specification	Details
Voltage	120V AC 60 HZ
Wattage	1 x 75W Maximum
Approval	UL Listed
Lamp Type (Lamp not Included)	1 x PAR30 Or PAR38 Lamp
Fixture Weight	8 lbs.
Fixture Dimensions	13" x 15" Max. x 16" Max.

- Fixture is packed one per cardboard box
- Fixture to be installed by other contractor

Vision Quest Lighting, Inc., assumes no responsibility for suitability of these materials in any luminaire or application. Please test for fit and function prior to ordering project quantities.

Manufactured by Vision Quest Lighting in the USA 90 13th Avenue, Unit 1, Ronkonkoma, NY 11779 Tel: 631-737-4800 Fax: 631-737-2808 Email: info@VQL.com